Inductor Data Sheet

LQH31CN100K03#

"#" indicates a package specification code.

In Production | General | 85 °C max. | Wound (Ferrite) | Reflow OK | Flow OK | RoHS | REACH

< List of part numbers with package codes >
LQH31CN100K03L , LQH31CN100K03K

Shape

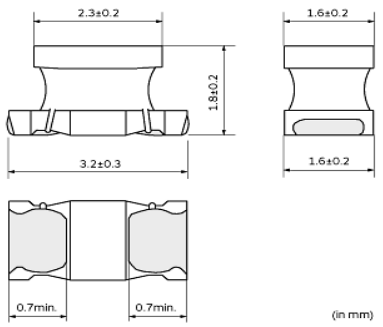

L size	3.2 ±0.3mm
W size	1.6 ±0.2mm
T size	1.8 ±0.2mm
Size code in inch (mm)	1206 (3216)

Notes

When rated current is applied to the products, inductance will be within ±10% of initial inductance value.
When rated current is applied to the products, the temperature rise caused by self-generated heat shall be limited to 35°C max.

References

Packaging code	Specifications	Minimum quantity
L	φ180mm Embossed taping	2000
K	φ330mm Embossed taping	7500

Mass (Typ.)	
1 piece	0.029g

Specifications

Inductance	10µH ±10%
Inductance test frequency	1MHz
Rated current (Itemp) (Based on Temperature rise)	230mA
Max. of DC resistance	1.69Ω
Avg. of DC resistance	1.3Ω ±30%
Self resonance frequency (min.)	20MHz
Operating temperature range (Self-temperature rise is not included)	-40°C to 85°C
Class of magnetic shield	No Shield
Series	LQH31CN_03

Attention

1.This datasheet is downloaded from the website of Murata Manufacturing Co., Ltd. Therefore, it's specifications are subject to change or our products in it may be discontinued without advance notice. Please check with our sales representatives or product engineers before ordering.
2.This datasheet has only typical specifications because there is no space for detailed specifications.
Therefore, please review our product specifications or consult the approval sheet for product specifications before ordering.

Chart of characteristic data (The charts below may show another part number which shares its characteristics.)

- Inductance-Frequency characteristics (Typ.)

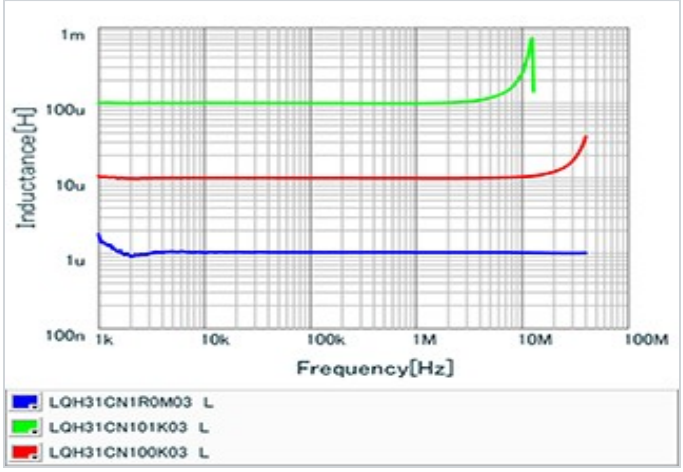

- Inductance-Current characteristics (Typ.)

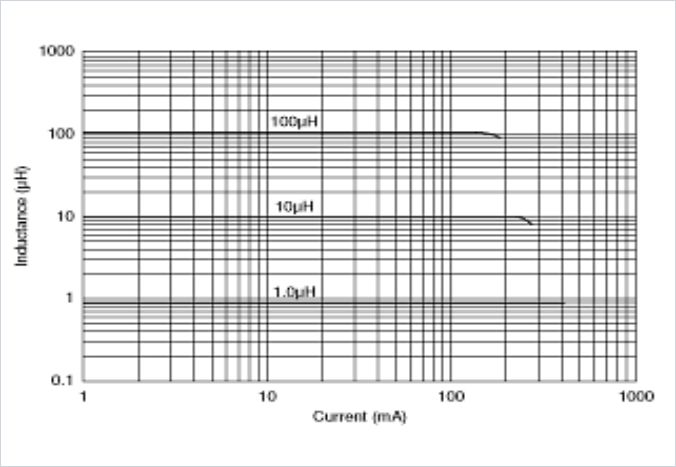

- Impedance-Frequency characteristics (Typ.)

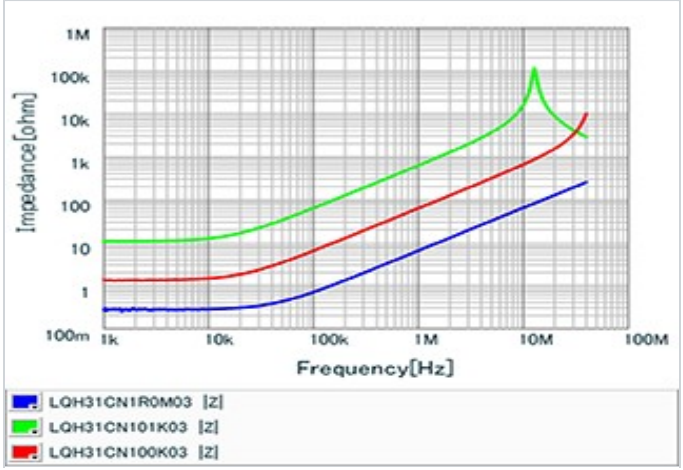

Attention

1.This datasheet is downloaded from the website of Murata Manufacturing Co., Ltd. Therefore, it's specifications are subject to change or our products in it may be discontinued without advance notice. Please check with our sales representatives or product engineers before ordering.
2.This datasheet has only typical specifications because there is no space for detailed specifications.
Therefore, please review our product specifications or consult the approval sheet for product specifications before ordering.