LQH31MN3R3K03#

"#" indicates a package specification code.

In Production | General | 85 °C max. | Wound (Ferrite) | Reflow OK | Flow OK | RoHS | REACH

< List of part numbers with package codes >
LQH31MN3R3K03L , LQH31MN3R3K03K

Shape

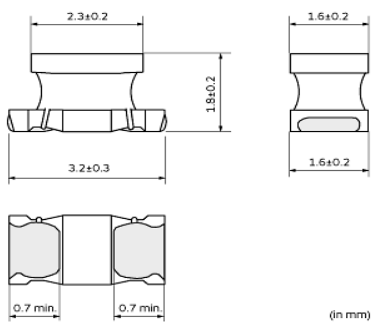

L size	3.2 ±0.3mm
W size	1.6 ±0.2mm
T size	1.8 ±0.2mm
Size code in inch (mm)	1206 (3216)

Notes

When rated current is applied to the products, self-temperature rise shall be limited to 20°C max and inductance will be within ±10% of initial inductance value.

References

Packaging code	Specifications	Minimum quantity
L	φ180mm Embossed taping	2000
K	φ330mm Embossed taping	7500

Mass (Typ.)	
1 piece	0.029g

Specifications

Inductance	3.3µH ±10%
Inductance test frequency	1MHz
Rated current (Itemp) (Based on Temperature rise)	130mA
Max. of DC resistance	0.793Ω
Avg. of DC resistance	0.61Ω±30%
Q (min.)	35
Q test frequency	8MHz
Self resonance frequency (min.)	38MHz
Operating temperature range (Self-temperature rise is not included)	-40°C to 85°C
Class of magnetic shield	No Shield
Series	LQH31MN_03

Attention

1.This datasheet is downloaded from the website of Murata Manufacturing Co., Ltd. Therefore, it's specifications are subject to change or our products in it may be discontinued without advance notice. Please check with our sales representatives or product engineers before ordering.
2.This datasheet has only typical specifications because there is no space for detailed specifications.
Therefore, please review our product specifications or consult the approval sheet for product specifications before ordering.

Chart of characteristic data (The charts below may show another part number which shares its characteristics.)

- Inductance-Current characteristics (Typ.)

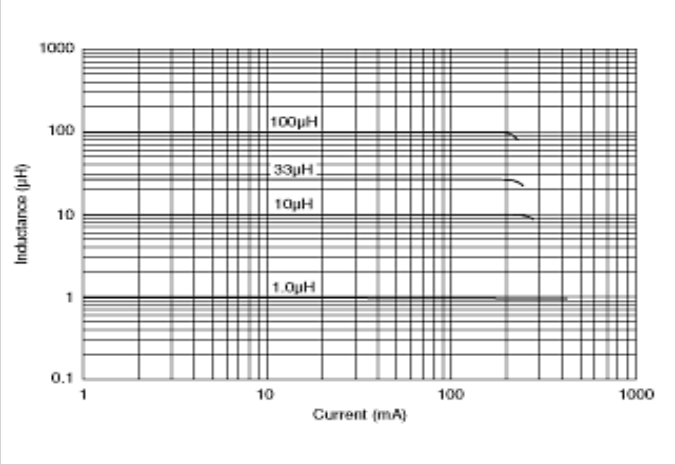

- Q-Frequency characteristics (Typ.)

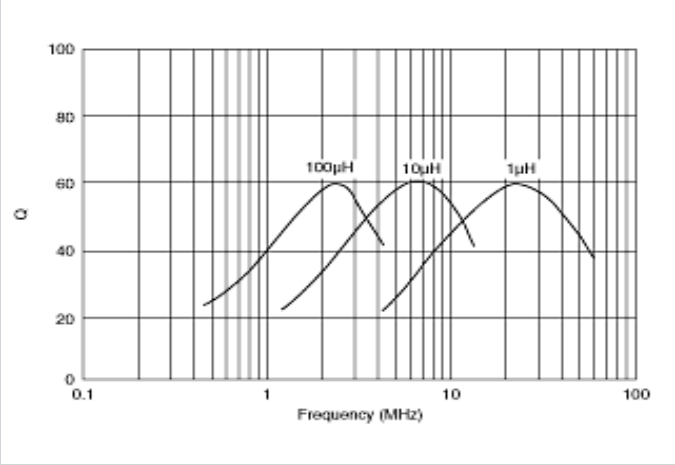

Attention

1.This datasheet is downloaded from the website of Murata Manufacturing Co., Ltd. Therefore, it's specifications are subject to change or our products in it may be discontinued without advance notice. Please check with our sales representatives or product engineers before ordering.
2.This datasheet has only typical specifications because there is no space for detailed specifications.
Therefore, please review our product specifications or consult the approval sheet for product specifications before ordering.