Inductor Data Sheet

LQH44PN2R2MP0#

"#" indicates a package specification code.

In Production | General | 125 °C max. | Wound (Ferrite) | Reflow OK | RoHS | REACH

< List of part numbers with package codes >
LQH44PN2R2MP0L , LQH44PN2R2MP0K

Shape

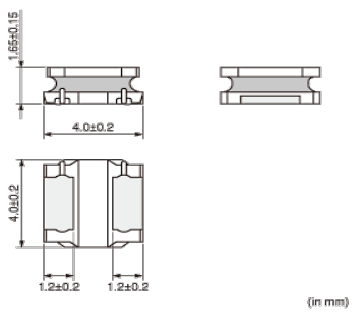

L size	4.0 ±0.2mm
W size	4.0 ±0.2mm
T size	1.65 ±0.15mm
Size code in inch (mm)	1515 (4040)

Notes

When rated current is applied to the products, inductance will be within ±30% of nominal inductance value.
When rated current is applied to the products, the temperature rise caused by self-generated heat shall be limited to 40°C max.
Keep the temperature (ambient temperature plus self-generation of heat) under 125°C.

References

Packaging code	Specifications	Minimum quantity
L	φ180mm Embossed taping	1000
K	φ330mm Embossed taping	3500

Mass (Typ.)	
1 piece	0.10g

Specifications

Inductance	2.2μH ±20%
Inductance test frequency	1MHz
Rated current (Isat) (Based on Inductance change)	2500mA
Rated current (Itemp) (Based on Temperature rise)	1800mA
Max. of DC resistance	0.0588Ω
Avg. of DC resistance	0.049Ω±20%
Self resonance frequency (min.)	70MHz
Operating temperature range (Self-temperature rise is included)	-40°C to 125°C
Operating temperature range (Self-temperature rise is not included)	-40°C to 85°C
Class of magnetic shield	Magnetic Resin
Series	LQH44PN_P0

Attention

1.This datasheet is downloaded from the website of Murata Manufacturing Co., Ltd. Therefore, it's specifications are subject to change or our products in it may be discontinued without advance notice. Please check with our sales representatives or product engineers before ordering.
2.This datasheet has only typical specifications because there is no space for detailed specifications.
Therefore, please review our product specifications or consult the approval sheet for product specifications before ordering.

Chart of characteristic data (The charts below may show another part number which shares its characteristics.)

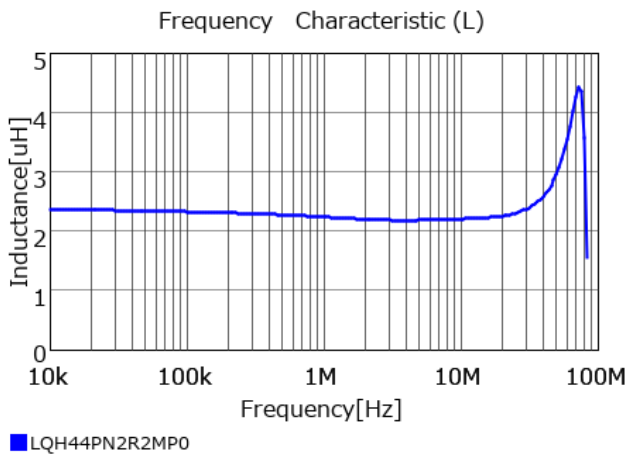

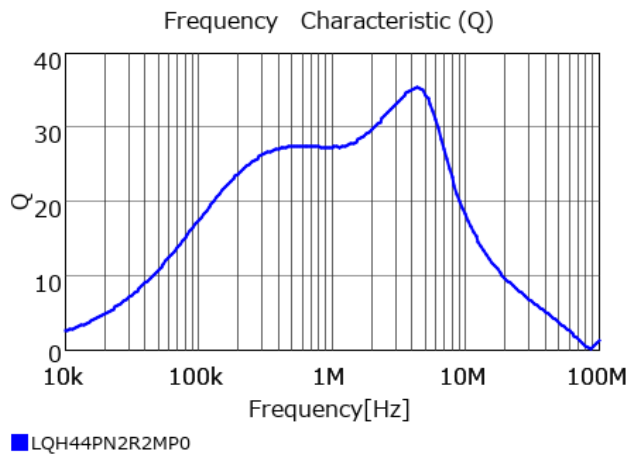

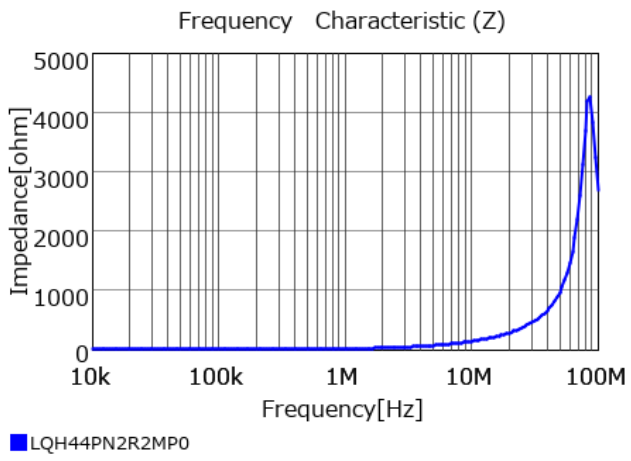

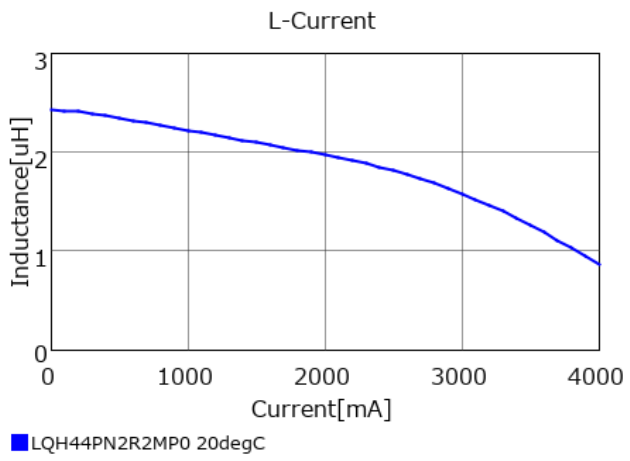

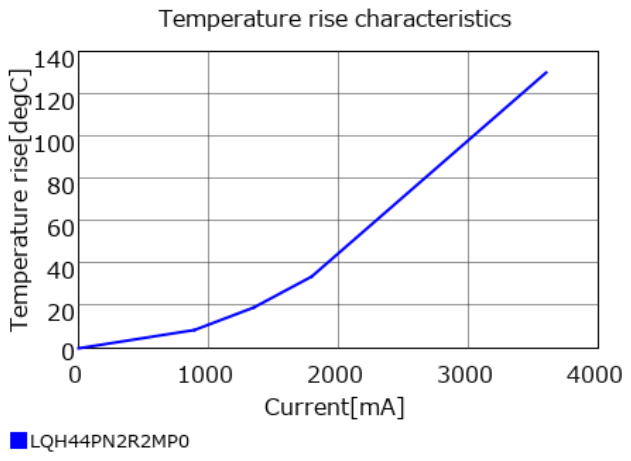

Attention

1.This datasheet is downloaded from the website of Murata Manufacturing Co., Ltd. Therefore, it's specifications are subject to change or our products in it may be discontinued without advance notice. Please check with our sales representatives or product engineers before ordering.
2.This datasheet has only typical specifications because there is no space for detailed specifications.
Therefore, please review our product specifications or consult the approval sheet for product specifications before ordering.