Inductor Data Sheet

LQW2BHN15NJ03#

"#" indicates a package specification code.

In Production | General | 85 °C max. | Wound (Non mag) | Reflow OK | Flow OK | RoHS | REACH

< List of part numbers with package codes >
LQW2BHN15NJ03L , LQW2BHN15NJ03K

Shape

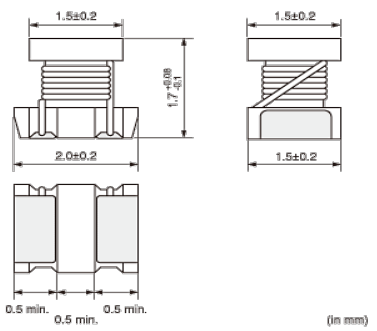

L size	2.0 ±0.2mm
W size	1.5 ±0.2mm
T size	1.7 +0.08/-0.1mm
Size code in inch (mm)	0805 (2015)

References

Packaging code	Specifications	Minimum quantity
L	φ180mm Embossed taping	2000
K	φ330mm Embossed taping	7500

Mass (Typ.)	
1 piece	0.009g

Specifications

Inductance	15nH ±5%
Inductance test frequency	100MHz
Rated current (Itemp) (Based on Temperature rise)	630mA
Max. of DC resistance	0.12Ω
Q (min.)	30
Q test frequency	250MHz
Self resonance frequency (min.)	2700MHz
Operating temperature range (Self-temperature rise is not included)	-40°C to 85°C
Series	LQW2BHN_03

Attention

1.This datasheet is downloaded from the website of Murata Manufacturing Co., Ltd. Therefore, it's specifications are subject to change or our products in it may be discontinued without advance notice. Please check with our sales representatives or product engineers before ordering.
2.This datasheet has only typical specifications because there is no space for detailed specifications.
Therefore, please review our product specifications or consult the approval sheet for product specifications before ordering.

Chart of characteristic data (The charts below may show another part number which shares its characteristics.)

- Inductance-Frequency characteristics (Typ.)

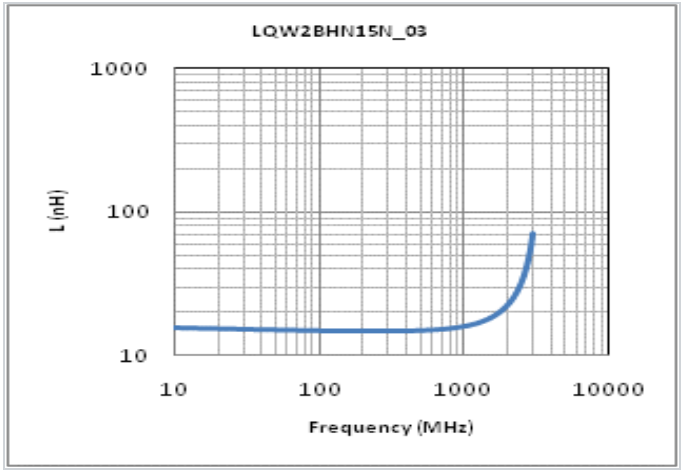

- Q-Frequency characteristics (Typ.)

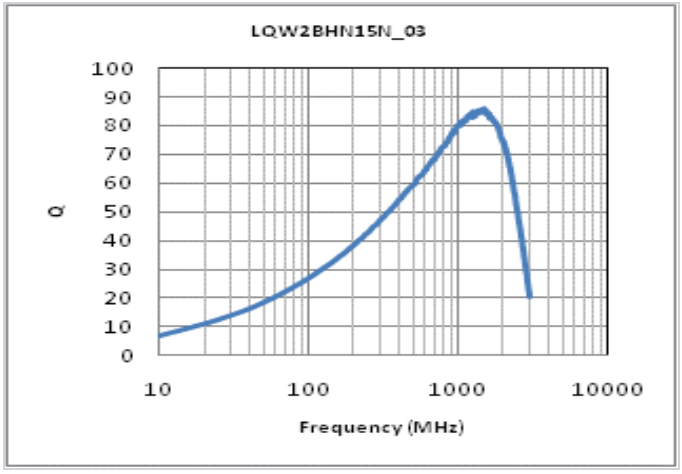

Attention

1.This datasheet is downloaded from the website of Murata Manufacturing Co., Ltd. Therefore, it's specifications are subject to change or our products in it may be discontinued without advance notice. Please check with our sales representatives or product engineers before ordering.
2.This datasheet has only typical specifications because there is no space for detailed specifications.
Therefore, please review our product specifications or consult the approval sheet for product specifications before ordering.