New DMS3R3224RF

ENERGY STORAGE INNOVATOR STARCAP

| Features |

- Small-sized, large capacity
- Long charge/discharge cycle life
- **SMT reflow soldering available**

| Applications |

- RTC back-up for GPS, Home Appliances

| Specifications |

Part No.		DMS 3R3 224RF
Cell Size		Ø6.8 × 1.4mm
Operating Temp.		-10 ~ +60℃
Rated Voltage		3.3Vdc
Capacitance		0.22F
Discharge Capacity		72 uAh (3.3V-2.0V)
Capacitance Tolerance		-20 ~ +80%
ESR (at 1KHz)		LESS THAN 200Ω
Leakage Current (30min.)		LESS THAN 150μA
Endurance		After 1,000hours application of rated DC working voltage at +60℃, the capacitor shall meet the following limits.
	Capacitance Change	±30% of the initial value
	ESR	Less than 2kΩ
Shelf Life		After 1,000hours storage at +60℃ without load, the capacitor shall meet the specified limit for "Endurance"

| Dimensions in mm(not to scale) |

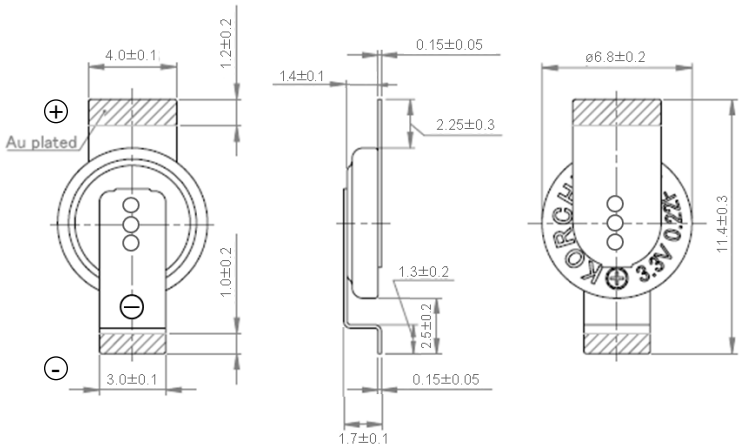

Recommendable PCB Layout

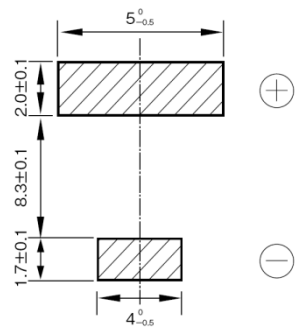

| Reflow Soldering Condition |

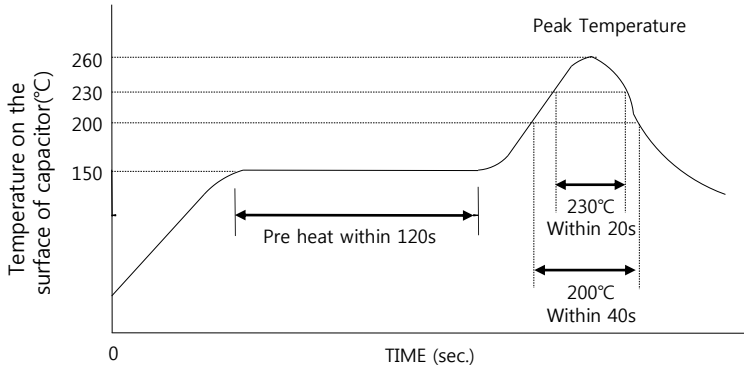

- **The peak temperature(260℃) is within 5 seconds**
- **The time of repeated reflow soldering must be two times or less.**
- **Do NOT apply reflow soldering, when cell voltage is above 0.3V**

Homepage : http://www.korchip.com
Head office : 82-31-361-8031~6 (Fax : 82-31-361-8080)
E-mail : starcap@korchip.com

ENERGY STORAGE INNOVATOR KORCHIP